DOOR CONTROL MODULE SYSTEM

Component Index

Driver Door Module (DDM)
Front Passenger Door Module (FPDM)
Fuse Block-Rear

Preliminary

DOOR CONTROL MODULE SYSTEM

Circuit Schematic

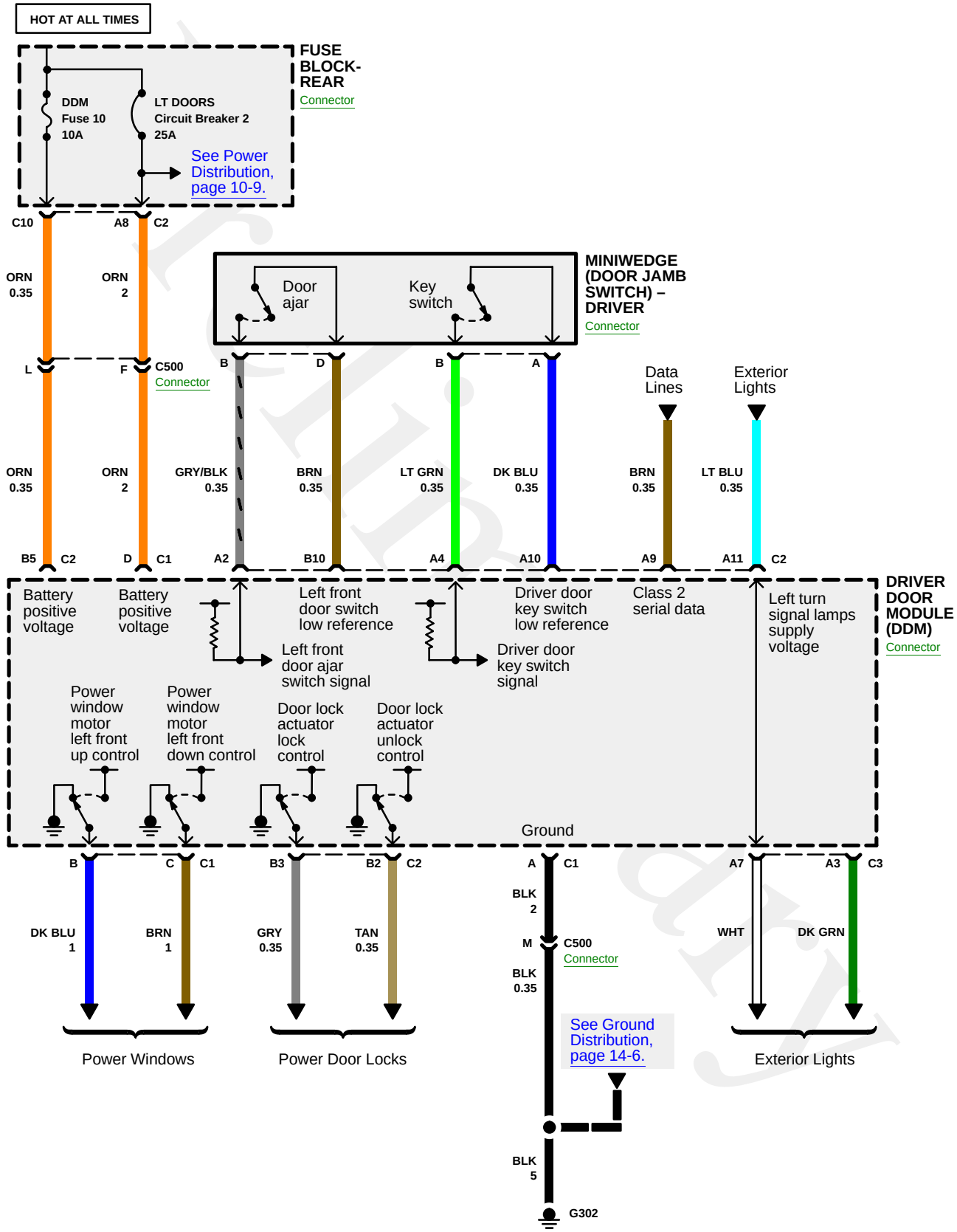

DOOR CONTROL MODULE SYSTEM

Circuit Schematic

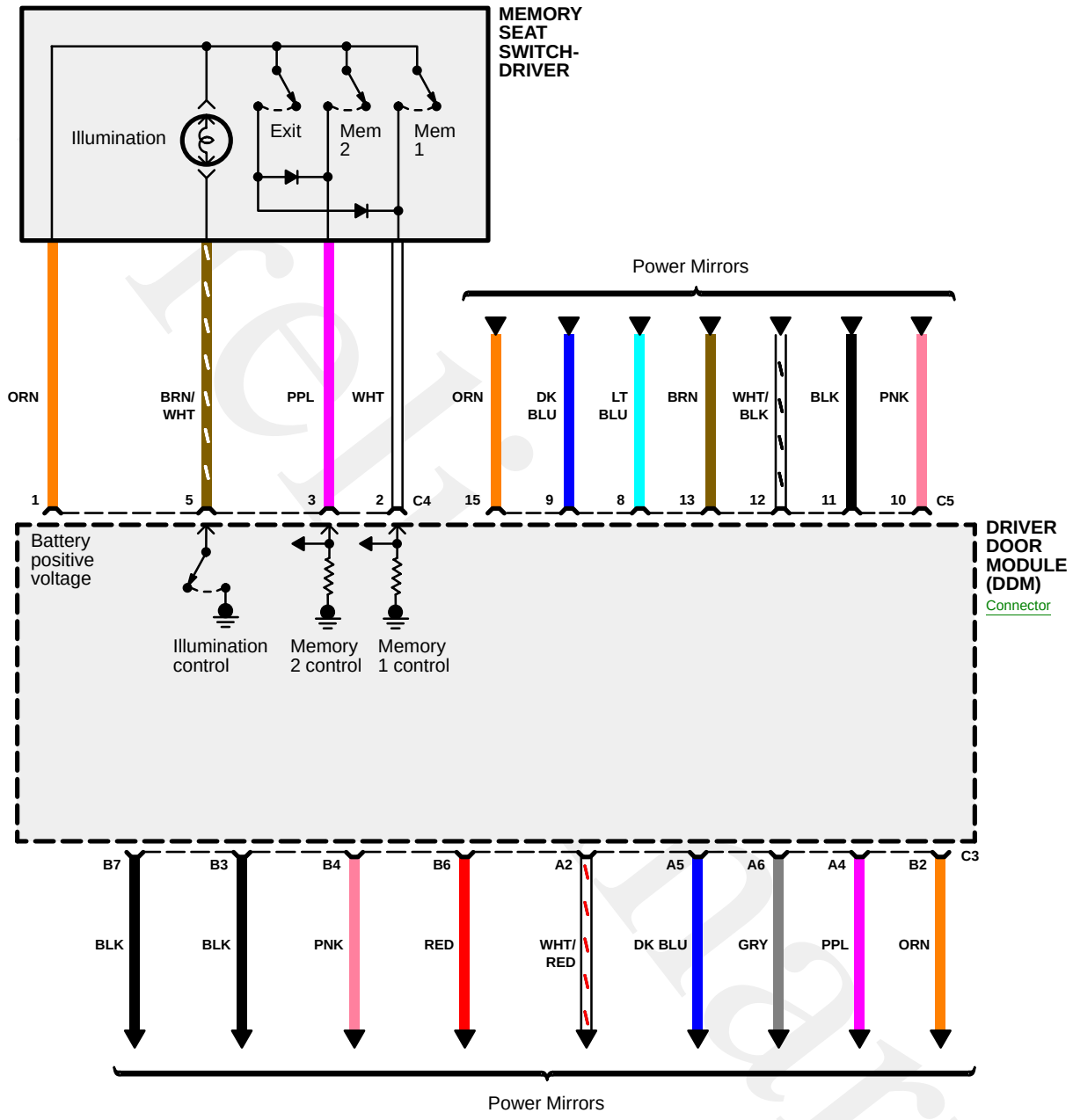

DOOR CONTROL MODULE SYSTEM

Circuit Schematic

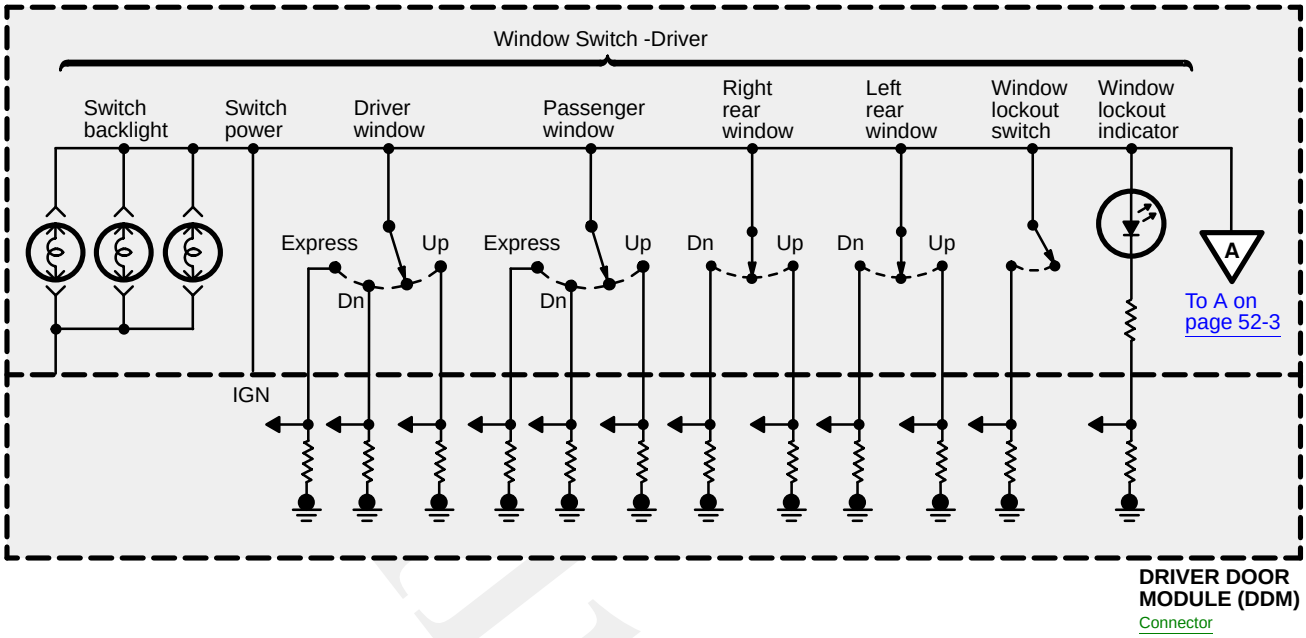

Preliminary

DOOR CONTROL MODULE SYSTEM

Circuit Schematic

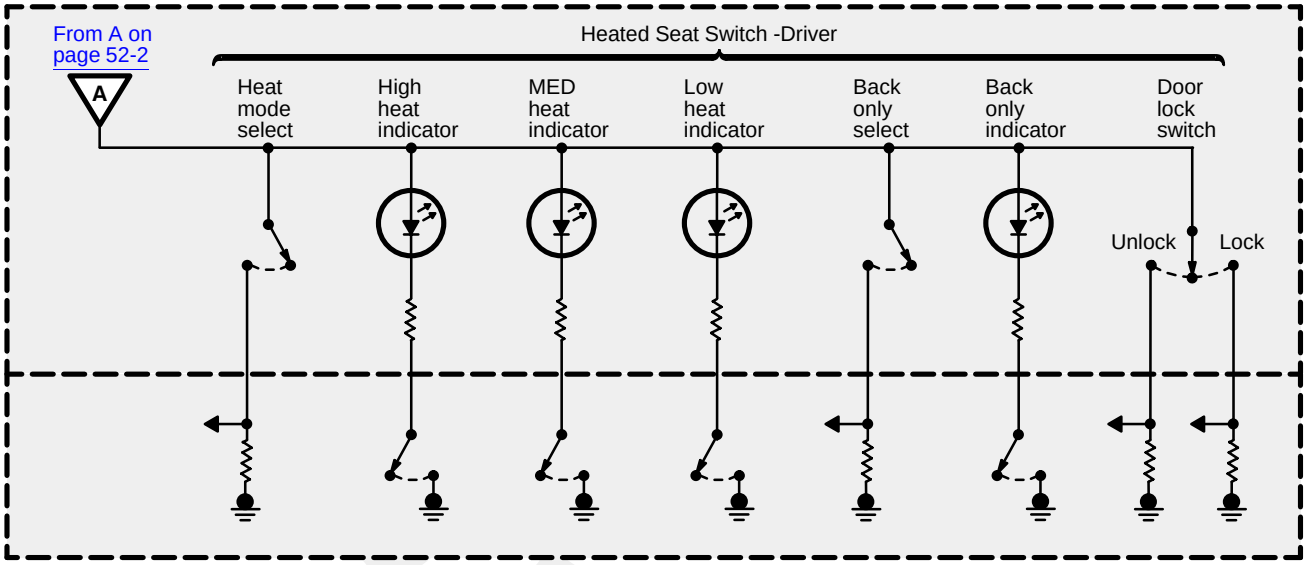

DRIVER DOOR MODULE (DDM)
Connector

Preliminary

DOOR CONTROL MODULE SYSTEM

Circuit Schematic

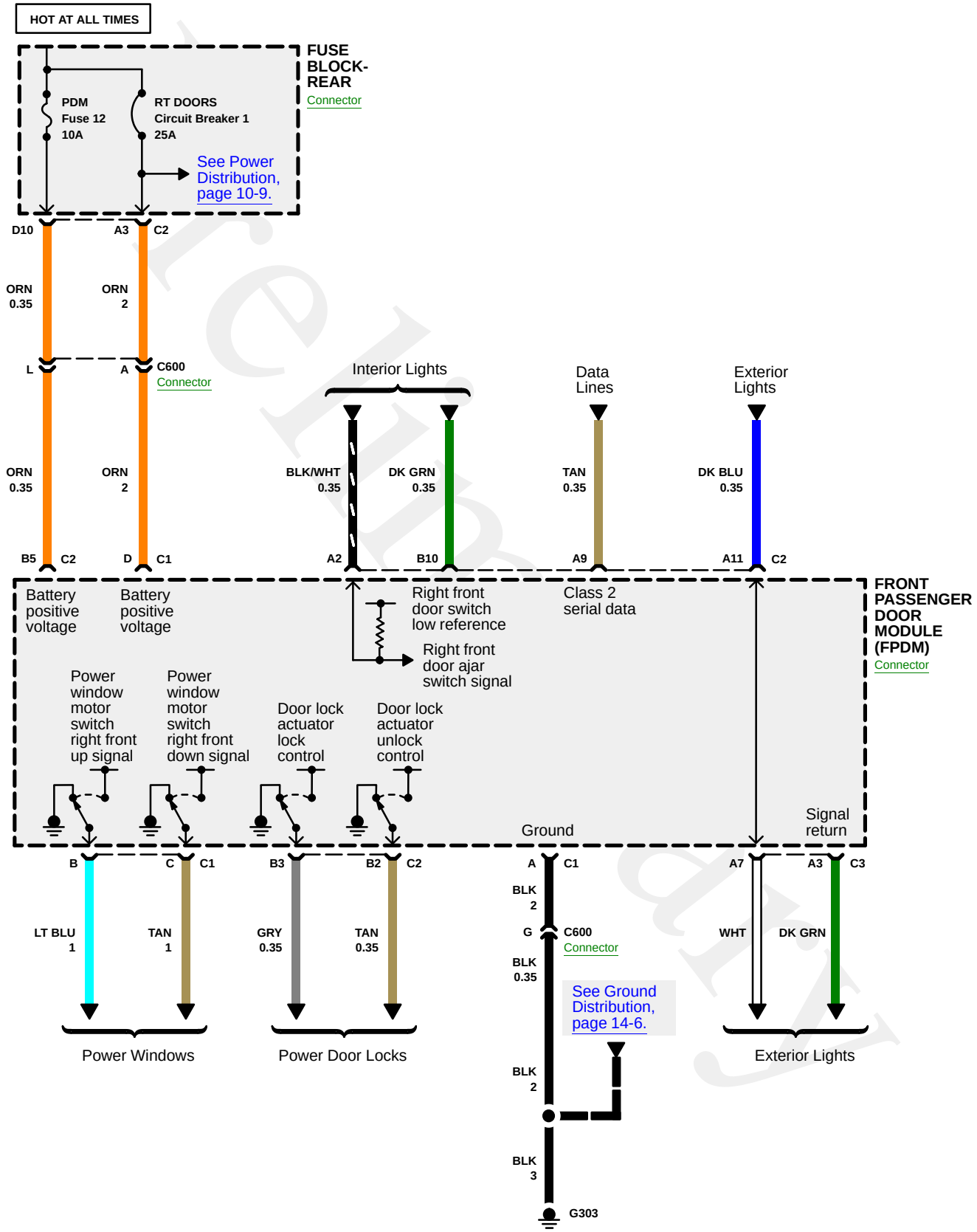

DOOR CONTROL MODULE SYSTEM

Circuit Schematic

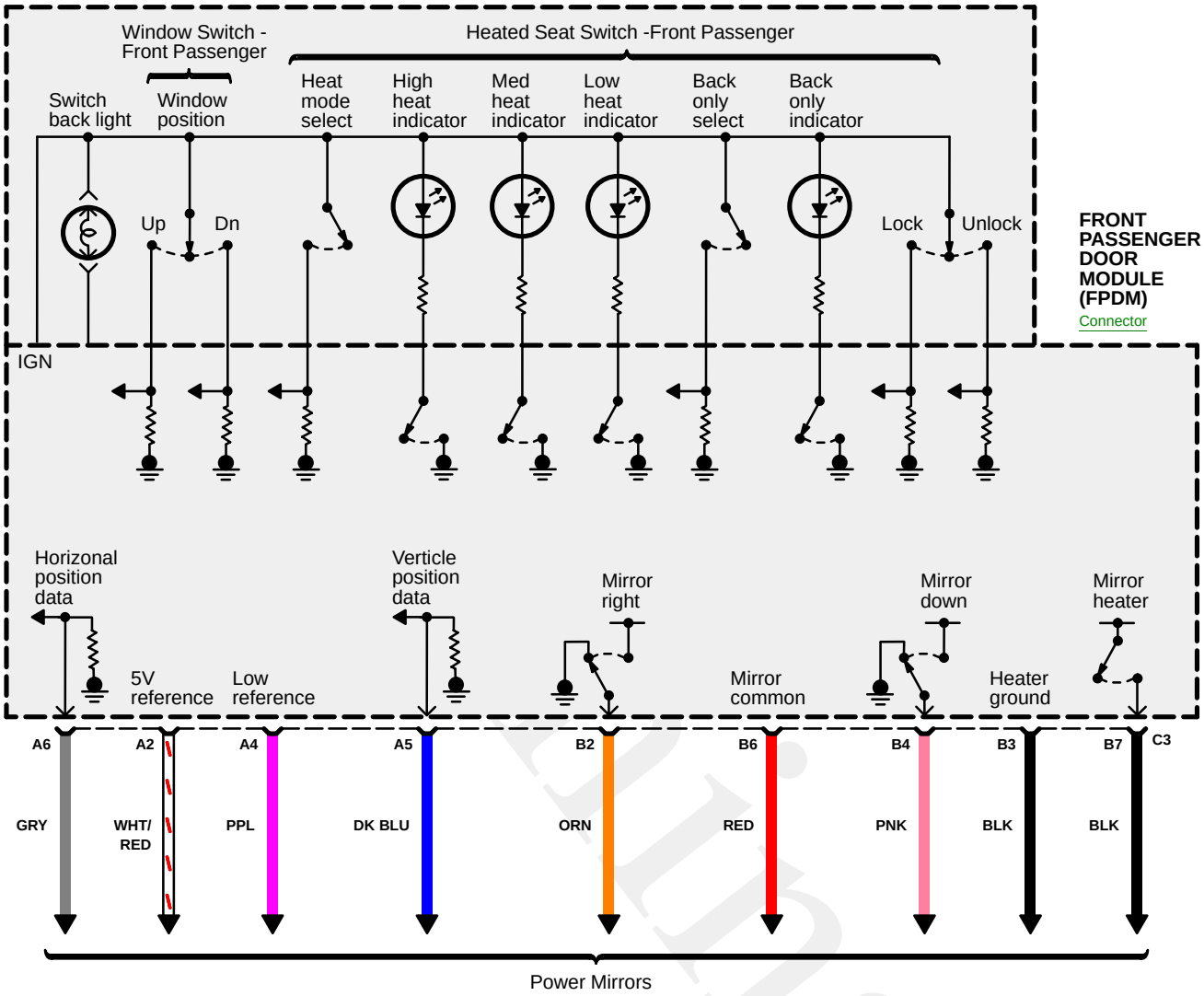

DOOR CONTROL MODULE SYSTEM

Circuit Operation

The driver door module is supplied power at all times through Fuse 10 DDM and Circuit Breaker 2 LT DOORS.

The driver door module is supplied power at all times through Fuse 12 PDM and Circuit Breaker 1 RT DOORS.

The driver and passenger door modules control various functions such as power-window, power-mirror, power-lock and power-seat controls. See corresponding system cell for circuit operation.

Preliminary

DOOR CONTROL MODULE SYSTEM

Component Location Index

(Refer to Section 201 for photographs.)

Component		Photo No.
Driver Door Module (DDM)	On lower part of the driver door switch panel	95
Front Passenger Door Module (FPDM)	On lower part of passenger door switch panel	96
Fuse Block-Rear	Under the left rear seat	52
Connector		
C500 (12-BLK)	Midpoint of leading edge of left front door	93
C600 (12-BLK)	Midpoint of leading edge of right front door	93
Ground		
G302	On the lower left B-pillar	105
G303	On the lower right B-pillar	105

Preliminary